Charleston
Collection

CH - 12E
wall mount

20h x 13.5w x 14.5d

ELECTRIC OPTIONS
- [x] Medium Base Socket
- [x] Frosted Chimney
- [x] Single Brass Candle
- [x] Single Brass Tall Candle
- [x] 2 Light Brass Cluster
- [x] 2 Light Tall Brass Cluster
- [x] 3 Light Brass Cluster
- [x] 4 Light Brass Cluster
- [x] Drip Candle Covers

UL DAMP

GAS OPTIONS
- [ ] Single Brass Burner
- [ ] Double Brass Burner
- [ ] Triple Brass Burner
- [ ] Extra Tall Burner
- [ ] LP Brass Burner
- [ ] Palmetto Flame Brass Burner
- [ ] Bat Flame Brass Burner
- [ ] Hidden Gas Line

UL

GLASS OPTIONS
- [x] Tempered Clear
- [x] Seeded
- [x] Artique

ACCESSORIES
- [x] Solid Copper Top
- [x] Copper Panels
- [x] Top Copper Ring
- [x] Brass Cross Bars
- [x] Copper Cross Bars
- [x] Top Loop
- [x] Full Scroll
- [x] Backward Scroll
- [x] Side Scrolls
- [x] Down Scrolls
- [x] Top Loop Hanger
- [ ] Wall Bracket WBC
- [x] Wall Yoke
- [x] Extender Bracket
- [x] Top Mount
- [x] Top Hole Backplate
- [ ] Pier Mount
- [ ] Pier Mount Cover

FINISHES
- [x] Solid Copper
- [x] Aged Bronze
- [x] Powder Coated Black
- [ ] Silver

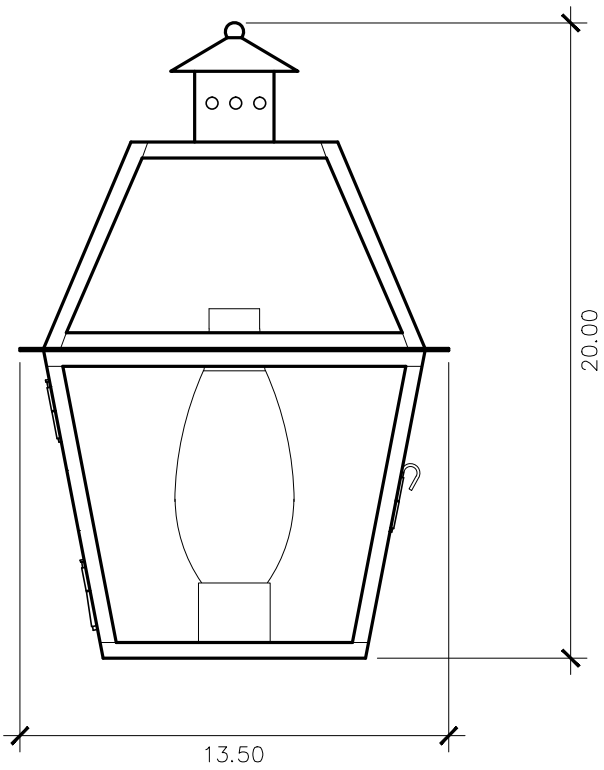

BACKPLATE

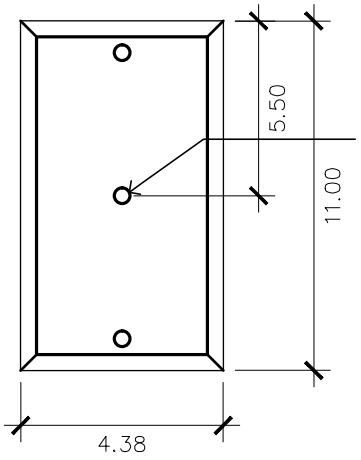

Mounting Hole
* Top of Fixture to Mounting Hole is 14.5"

STANDARD FEATURES
Solid Copper
Tempered Clear Glass
Electric: Medium Base Socket

** Shown with Optional Frosted Chimney*

Lantern & Scroll
a brilliant first impression

2041 South Blvd. Suite C, Charlotte, NC 28203 - 704.333.5088 - buyfrom@lanternandscroll.com